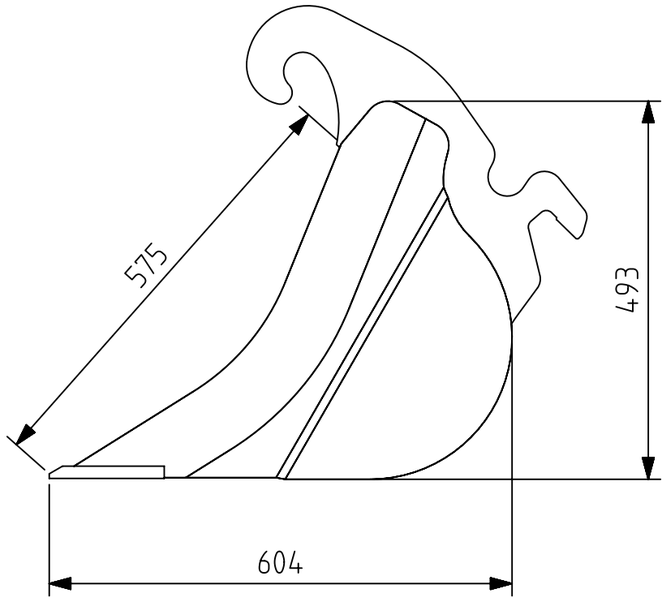

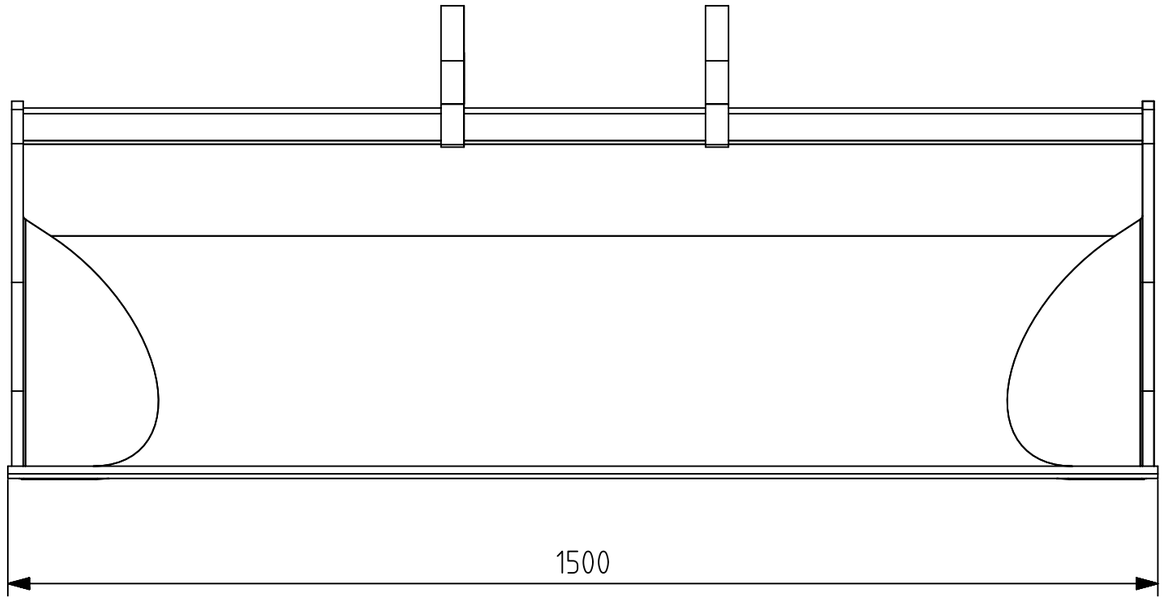

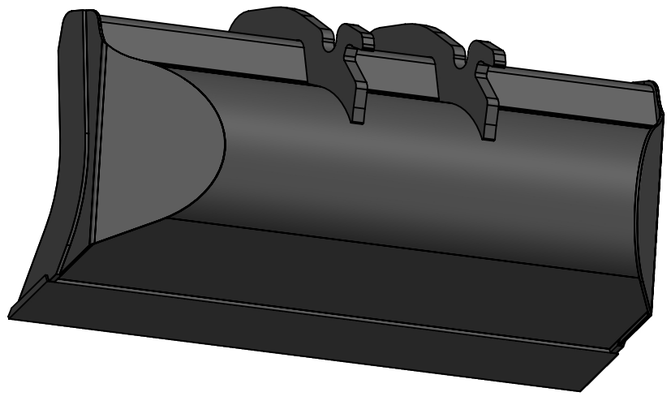

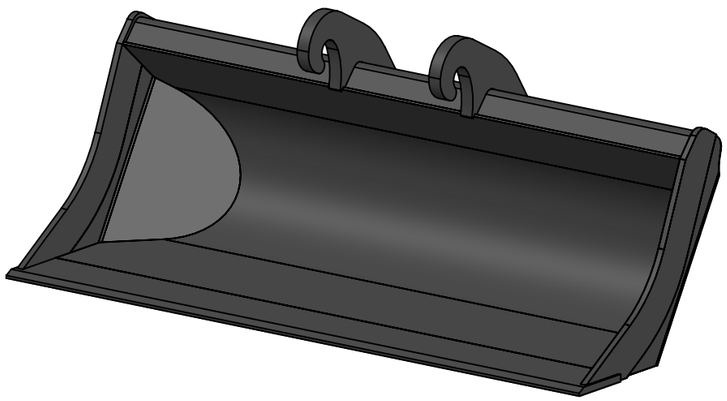

WEIGHT	MATERIAL	REMARKS	DRAWN BY	DATE
135kg	Staal	Heaped capacity (SAE) 301l	dylan	28-Apr-2022

GENERAL TOLERANCE FOR LENGTH,ANGLE,CHAMFER,FILLET: ISO2768-m / SHAPE AND PLACE: ISO2768-K / WELD DIMENSIONS: DIN8570 T1 CLASS 'B'

TITLE	SCALE	SIZE
Kofferbak type 5 1.5m tiltrotator	1:1	A3

DRAWING NO	REV.	SHEET
TT0064455	A	1 / 1

Luyckx MINDS × MACHINERY